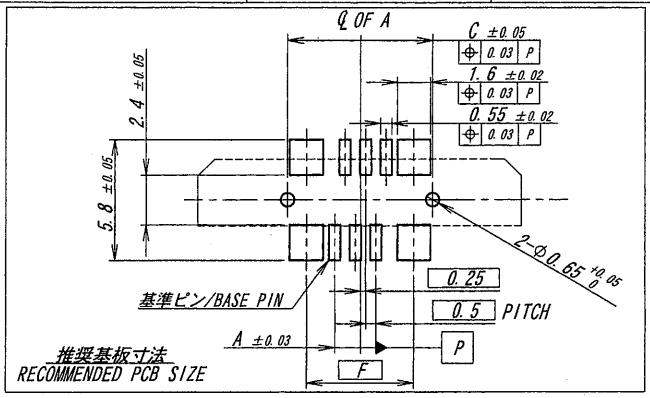

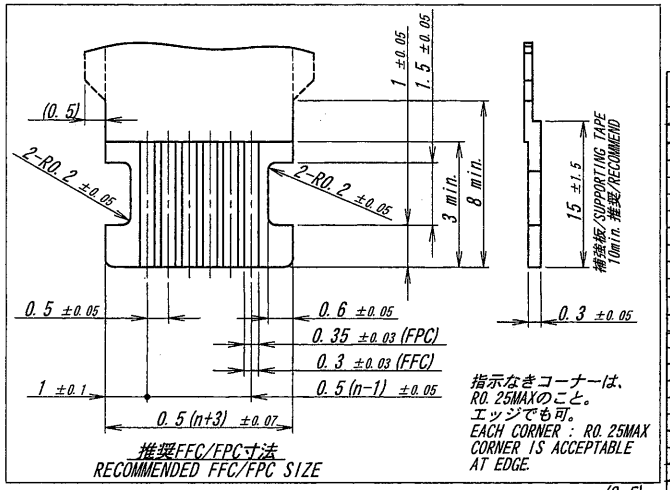

指示なきコーナーは、
R0.25MAXのこと。
エッジでも可。
EACH CORNER : R0.25MAX
CORNER IS ACCEPTABLE
AT EDGE.

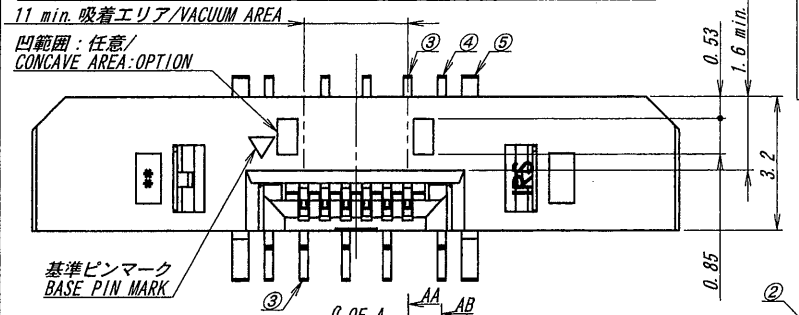

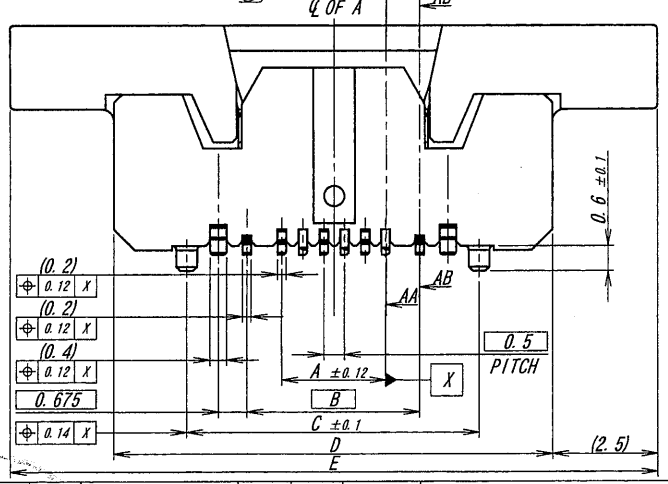

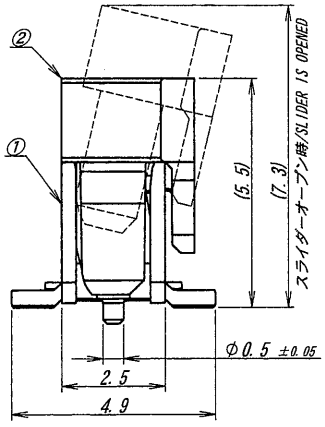

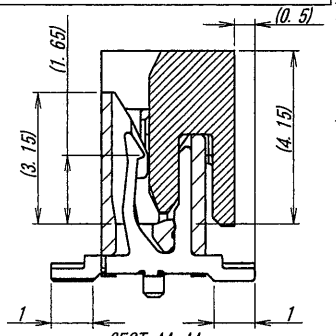

SECT. AA-AA

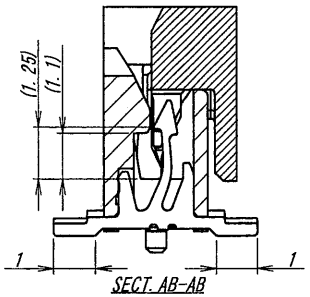

SECT. AB-AB

NOTE

1. コプラナリティー/COPLANARITY
コンタクトと補強板と仮保持端子：0.1mm MAX.
CONTACT, METAL FLANGE AND HALF LOCK CONTACT : 0.1mm MAX.

極数 CKT	部品番号 PARTS No.	A	B	C	D	E	F
4	9687S-04D-GFA	1.5	3.15	6.0	9.5	14.5	4.2
5	9687S-05D-GFA	2.0	3.65	6.5	10.0	15.0	4.7
6	9687S-06D-GFA	2.5	4.15	7.0	10.5	15.5	5.2
7	9687S-07D-GFA	3.0	4.65	7.5	11.0	16.0	5.7
8	9687S-08D-GFA	3.5	5.15	8.0	11.5	16.5	6.2
9	9687S-09D-GFA	4.0	5.65	8.5	12.0	17.0	6.7
10	9687S-10D-GFA	4.5	6.15	9.0	12.5	17.5	7.2
11	9687S-11D-GFA	5.0	6.65	9.5	13.0	18.0	7.7
12	9687S-12D-GFA	5.5	7.15	10.0	13.5	18.5	8.2
13	9687S-13D-GFA	6.0	7.65	10.5	14.0	19.0	8.7
14	9687S-14D-GFA	6.5	8.15	11.0	14.5	19.5	9.2
15	9687S-15D-GFA	7.0	8.65	11.5	15.0	20.0	9.7
16	9687S-16D-GFA	7.5	9.15	12.0	15.5	20.5	10.2
17	9687S-17D-GFA	8.0	9.65	12.5	16.0	21.0	10.7
18	9687S-18D-GFA	8.5	10.15	13.0	16.5	21.5	11.2
19	9687S-19D-GFA	9.0	10.65	13.5	17.0	22.0	11.7
20	9687S-20D-GFA	9.5	11.15	14.0	17.5	22.5	12.2
21	9687S-21D-GFA	10.0	11.65	14.5	18.0	23.0	12.7
22	9687S-22D-GFA	10.5	12.15	15.0	18.5	23.5	13.2
23	9687S-23D-GFA	11.0	12.65	15.5	19.0	24.0	13.7
24	9687S-24D-GFA	11.5	13.15	16.0	19.5	24.5	14.2
25	9687S-25D-GFA	12.0	13.65	16.5	20.0	25.0	14.7
26	9687S-26D-GFA	12.5	14.15	17.0	20.5	25.5	15.2
27	9687S-27D-GFA	13.0	14.65	17.5	21.0	26.0	15.7
28	9687S-28D-GFA	13.5	15.15	18.0	21.5	26.5	16.2
29	9687S-29D-GFA	14.0	15.65	18.5	22.0	27.0	16.7
30	9687S-30D-GFA	14.5	16.15	19.0	22.5	27.5	17.2
31	9687S-31D-GFA	15.0	16.65	19.5	23.0	28.0	17.7
32	9687S-32D-GFA	15.5	17.15	20.0	23.5	28.5	18.2
33	9687S-33D-GFA	16.0	17.65	20.5	24.0	29.0	18.7
34	9687S-34D-GFA	16.5	18.15	21.0	24.5	29.5	19.2
35	9687S-35D-GFA	17.0	18.65	21.5	25.0	30.0	19.7
36	9687S-36D-GFA	17.5	19.15	22.0	25.5	30.5	20.2
37	9687S-37D-GFA	18.0	19.65	22.5	26.0	31.0	20.7
38	9687S-38D-GFA	18.5	20.15	23.0	26.5	31.5	21.2
39	9687S-39D-GFA	19.0	20.65	23.5	27.0	32.0	21.7
40	9687S-40D-GFA	19.5	21.15	24.0	27.5	32.5	22.2
41	9687S-41D-GFA	20.0	21.65	24.5	28.0	33.0	22.7
42	9687S-42D-GFA	20.5	22.15	25.0	28.5	33.5	23.2
43	9687S-43D-GFA	21.0	22.65	25.5	29.0	34.0	23.7
44	9687S-44D-GFA	21.5	23.15	26.0	29.5	34.5	24.2
45	9687S-45D-GFA	22.0	23.65	26.5	30.0	35.0	24.7
46	9687S-46D-GFA	22.5	24.15	27.0	30.5	35.5	25.2
47	9687S-47D-GFA	23.0	24.65	27.5	31.0	36.0	25.7
48	9687S-48D-GFA	23.5	25.15	28.0	31.5	36.5	26.2
49	9687S-49D-GFA	24.0	25.65	28.5	32.0	37.0	26.7
50	9687S-50D-GFA	24.5	26.15	29.0	32.5	37.5	27.2
51	9687S-51D-GFA	25.0	26.65	29.5	33.0	38.0	27.7
52	9687S-52D-GFA	25.5	27.15	30.0	33.5	38.5	28.2
53	9687S-53D-GFA	26.0	27.65	30.5	34.0	39.0	28.7
54	9687S-54D-GFA	26.5	28.15	31.0	34.5	39.5	29.2
55	9687S-55D-GFA	27.0	28.65	31.5	35.0	40.0	29.7
56	9687S-56D-GFA	27.5	29.15	32.0	35.5	40.5	30.2
57	9687S-57D-GFA	28.0	29.65	32.5	36.0	41.0	30.7
58	9687S-58D-GFA	28.5	30.15	33.0	36.5	41.5	31.2
59	9687S-59D-GFA	29.0	30.65	33.5	37.0	42.0	31.7
60	9687S-60D-GFA	29.5	31.15	34.0	37.5	42.5	32.2

LTR 記号	ECN No	REVISION RECORD 記事	DR	CHK	DATE 年月日
D					
C					
B					
A					
1	49667	RELEASED	Y.T	J.Ma	'15-04-07

MATERIAL 材質
①ハウジング/HOUSING:LCP樹脂,黒色,UL94V-0
LCP, BLACK, UL94V-0
②スライダー/SLIDER : PA9T樹脂,自然色,UL94V-0
PA9T, NATURAL, UL94V-0
③コンタクト/CONTACT:りん青銅/PHOSPHOR BRONZE
④仮保持端子/HALF LOCK CONTACT : りん青銅/PHOSPHOR BRONZE
⑤補強板/METAL FLANGE:黄銅/BRASS

FINISH 仕上げ
③ニッケル下地めっき／OVER Ni PLATE : 2μm min.
金めっき／Au PLATE : 0.1μm min.
④ニッケル下地めっき／OVER Ni PLATE : 2μm min.
金めっき／Au PLATE : 0.1μm min.
⑤ニッケル下地めっき/OVER Ni PLATE : 0.5～2μm
半光沢錫めっき/TIN MATT PLATE : 3～6μm

GENERAL TOLERANCES 一般公差
DIM 寸法 ± 0.3
ANGLE 角度 ±

3RD. ANG. PROJ. 三角法

SCALE 尺度 —
UNIT 単位 mm
DR '15-04-07 Y.Takehana
DSN '10-08-19 T.Haga
CHK 4/7 '15 J.Ma
APP 4/7 '15 M.Yoshi

IRISO ELECTRONICS CO., LTD
イリソ電子工業株式会社

TITLE 名称
9687シリーズ FFC/FPC ソケット
SERIES 9687 FFC/FPC SOCKET

EDP No

PARTS No 部番
IMSA-9687S-**D-GFA

DWG No 図番
110-409687-013

REV. 0

DO NOT SCALE DRAWING.
THIS DRAWING CONTAINS INFORMATION THAT IS PROPRIETARY TO IRISO AND SHOULD NOT BE USED WITHOUT WRITTEN PERMISSION. 本図面は、イリソ電子工業（株）の所有する情報を含むもので当社の許可なく複製を禁止する。

REDUSED COPY