極数/CKT	部品番号/PARTS No.	A	B	C	D	E	F
30	9860B-30C-GFA	11.2	13.0	13.7	16.4	16.1	15.0
~~40~~	~~9860B-40C-GFA~~	~~15.2~~	~~17.0~~	~~17.7~~	~~20.4~~	~~20.1~~	~~19.0~~
~~50~~	~~9860B-50C-GFA~~	~~19.2~~	~~21.0~~	~~21.7~~	~~24.4~~	~~24.1~~	~~23.0~~
~~60~~	~~9860B-60C-GFA~~	~~23.2~~	~~25.0~~	~~25.7~~	~~28.4~~	~~28.1~~	~~27.0~~
~~70~~	~~9860B-70C-GFA~~	~~27.2~~	~~29.0~~	~~29.7~~	~~32.4~~	~~32.1~~	~~31.0~~
80	9860B-80C-GFA	31.2	33.0	33.7	36.4	36.1	35.0
~~90~~	~~9860B-90C-GFA~~	~~35.2~~	~~37.0~~	~~37.7~~	~~40.4~~	~~40.1~~	~~39.0~~
~~100~~	~~9860B-100C-GFA~~	~~39.2~~	~~41.0~~	~~41.7~~	~~44.4~~	~~44.1~~	~~43.0~~
~~110~~	~~9860B-110C-GFA~~	~~43.2~~	~~45.0~~	~~45.7~~	~~48.4~~	~~48.1~~	~~47.0~~
~~120~~	~~9860B-120C-GFA~~	~~47.2~~	~~49.0~~	~~49.7~~	~~52.4~~	~~52.1~~	~~51.0~~

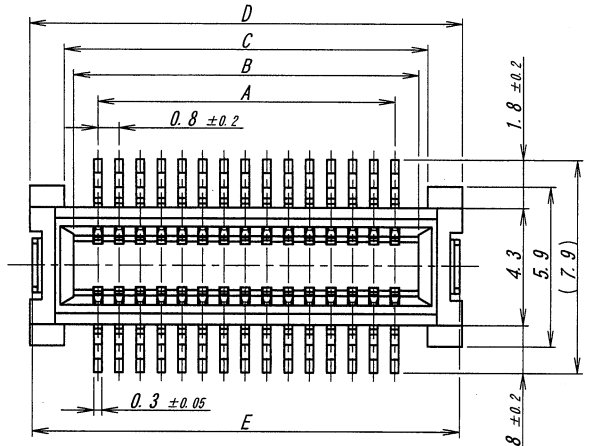

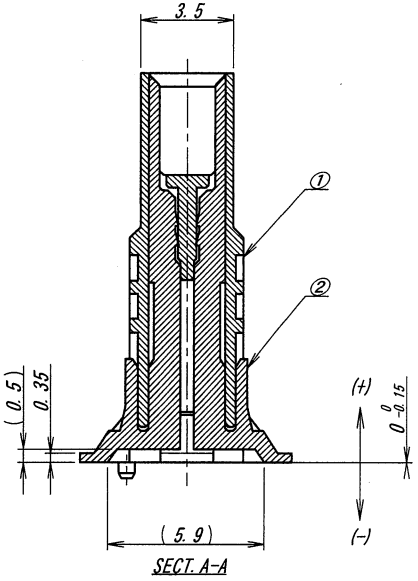

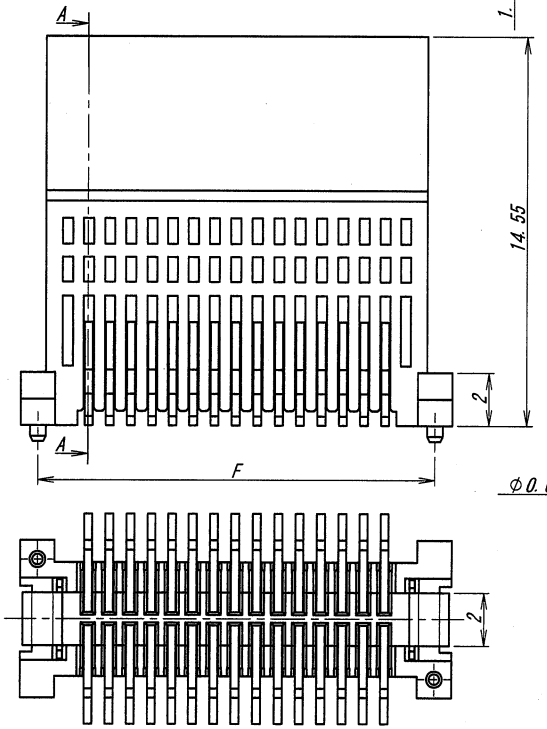

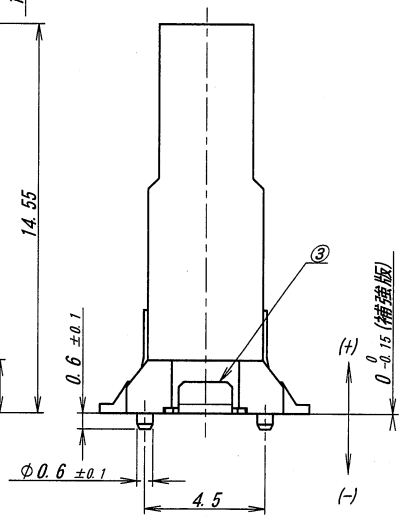

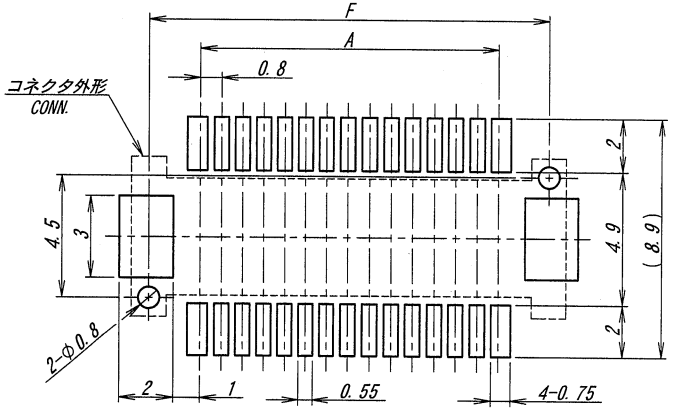

推奨基板寸法
一般公差：±0.05（マウント面）
RECOMMENDED PCB SIZE
GENERAL TORERANCE : ±0.05
(MOUNTING SIDE)

NOTE
1. 端子及び補強板相互間のバラツキ
COPLANALITY (WITH METAL FLANGE) : 0.1MAX.
2. ブリスター梱包品/PACKING OF BLISTER

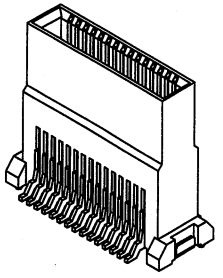

30極 適用形状
ONLY 30CKT APPLY.

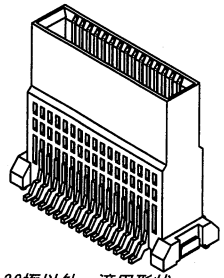

30極以外 適用形状
APPLIES EXCLUDING 30CKT.

LTR 記号	ECN No	REVISION RECORD 記事	DR	CHK	DATE 年月日
△					
△					
△					
△					
△					
△					
△					
0	28026	RELEASED	K.S	S.M	'07-1-16

MATERIAL 材質
①ベース/BASE
：ガラス入り樹脂/GLASS FIILED PLASTICS
自然色/NATURAL UL94V-0
②ポスト/POST
：銅合金/COPPER ALLOY
③補強板/METAL FLANGE
：銅合金/COPPER ALLOY

FINISH 仕上げ
②ポスト/POST
：ニッケル下地めっき/OVER Ni PLATE:2μmMIN.
：金めっき（接点）/Au PLATE (CONTACT POINT):0.1μmMIN.
（テール部）/(SOLDER TAIL):0.03μmMIN.
封孔処理済/SEALING TREATMENT.
③補強板/METAL FLANGE
：ニッケル下地めっき/OVER Ni PLATE:1～3μm.
：スズ-銅めっき/TIN-COPPER PLATE:2～5μm.

GENERAL TOLERANCES 一般公差
DIM 寸法 ±0.3
ANGLE 角度 ±

3RD. ANG. PROJ. 三角法

SCALE 尺度 ×
UNIT 単位 mm
DR '07-1-16 K. Sato
DSN '04-10-15 H. Honma
CHK '07/1/16 S. Matsuzaki
APP '07/1/16 M. Nukada

IRISO ELECTRONICS CO., LTD
イリソ電子工業株式会社

TITLE 名称
9860シリーズ プラグ
SERIES 9860 PLUG

EDP No

PARTS No 部番
9860B-**C-GFA

DWG No 図番
IMSA-9860B-**C-GFA

REV. 0

DO NOT SCALE DRAWING.
THIS DRAWING CONTAINS INFORMATION THAT IS PROPRIETARY TO IRISO AND SHOULD NOT BE USED WITHOUT WRITTEN PERMISSION. 本図面は、イリソ電子工業（株）の所有する情報を含むもので当社の許可なく複製を禁止する。

REDUSED COPY